technical data

stick out	9mm

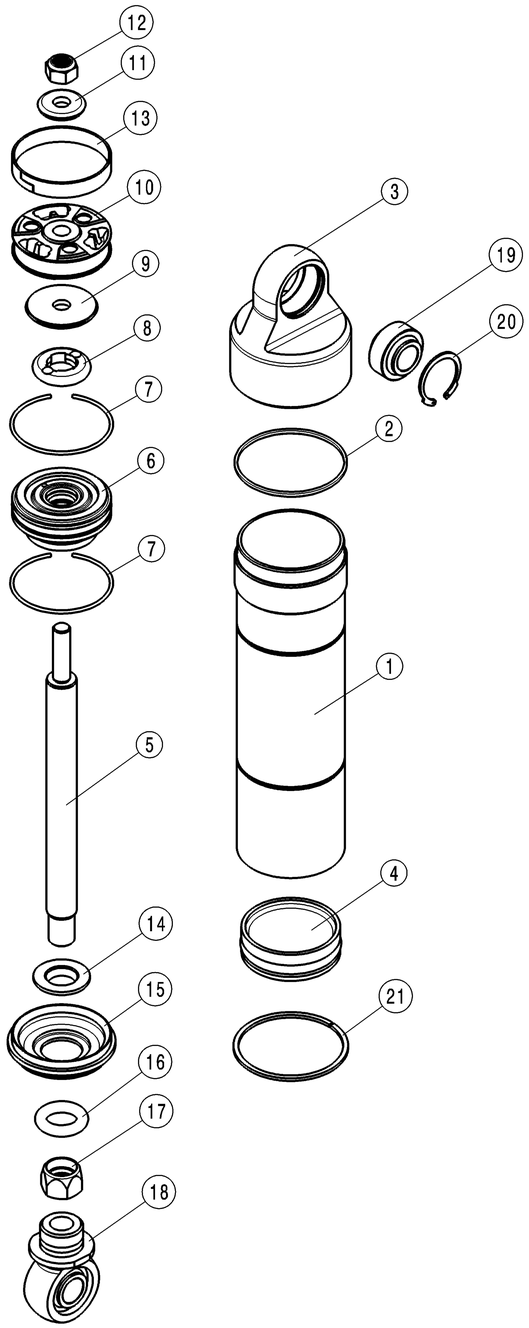

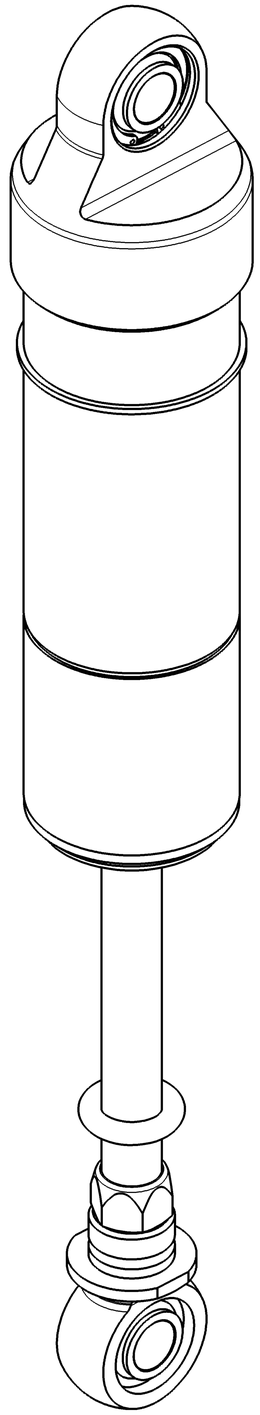

Scale 1:1

ITEM NO.	PART NO.	Component Description
1	See Chart	Tube, Dm 46, Steel
2	E4-DI6-Z109A00	O-Ring, Buna-N, Dash Number 033
3	E4-LG0-Z016A03	Endcap, Internal Thread, SNS2
4	B4-B46-U160	Dividing Piston, Aluminum
5	See Chart	Piston Rod
6	B4-B0A-0000119	Rod Guide
7	E4-B46-26	Snap Ring, 46mm Internal
8	E4-AP1-Z023A03	Rebound Stop, Blue
9	E4-SB1-Z030A00	Brake, 8 ID, 32.5 / 2.5
10	E4-B46-20SNCT	Piston, 8 ID, Linear
11	E4-SB1-Z023A01	Brake, 8 ID, 21 / 3 Concave
12	1000424	M8x1 Locknut
13	E4-KR2-X001A02	Piston Band
14	E4-DI1-Z002A01	Wiper, 14mm
15	E4-SB3-Z004A02	Jounce Cap
16	2568310	O-Ring, 12.01 x 5.33 Travel Indicator
17	E4-MU1-Z010A00	M12x1 Jam Nut
18	B4-LG0-Z043A01	Rod End Assembly
19	E4-GL1-Z020A00	Spherical Bearing, 12.7 ID
20	E4-B0A-0000440	Snap Ring, 26mm
21	2522880	Snap Ring, SW 50, External

Tightening Torques

Fitted Components	Torques [Nm]	Additional Lock
Tube - Endcap	120.0	Loctite 271
Rod End - Piston Rod	1.0	-
Rod End - Jam Nut	40.0	-

Part Number	Catalog Number	Item Number 1	Item Number 5	Dividing Piston Depth **	Oil Volume [ccm]
33-260044	SNS2-L50N0	E4-R03-Z116A00	E4-KS2-Z060A49	175.0	222.0
33-260051	SNS2-L60N0	E4-R03-Z116A01	E4-KS2-Z060A50	200.0	259.0
33-260068	SNS2-L70N0	E4-R03-Z116A02	E4-KS2-Z060A51	225.5	298.0
33-260075	SNS2-L80N0	E4-R03-Z116A03	E4-KS2-Z060A52	250.0	335.0
33-260082	SNS2-L90N0	E4-R03-Z116A04	E4-KS2-Z060A53	275.5	373.0

** Dividing Piston depth measured from the end of the Tube to the bottom of the Dividing Piston cavity.

Die Zeichnung und ihr Inhalt sind gegenueber Dritten geheimzuhalten, falls nicht unsere ausdrueckliche Zustimmung zur Weitergabe vorliegt. Fuer die Gegenstaende dieser Zeichnung wird hiermit Rechtsvorbehalt gemaess Paragraph 7 Pat. G und Paragraph 5 Abs. GbmG fuer den Fall der Patenterteilung bzw. Gebrauchsmustereintrag erklaert.

The drawing and its content are not to be revealed to third parties, unless our express consent is given. All rights are reserved for the items listed in this drawing as per paragraph 7 Patent Law and paragraph 5 UtilityPatent Law in the event that the patent is grantedor the utility patent is registered.

Passmass/fit tolerance	Abmass/applied tolerance		
		Feld/Section	Aenderung/Revision
Gezeichnet/Drawn	Datum/Date	Geprueft/checked	Datum/Date
Standardgeprueft/standards checked	Datum/Date		

Freimasstoleranzen nach — General tolerances according to	Projektion :	Ersatz fuer Replacement for		Normgeprueft/Standards	Datum/Date
		ersetzt durch replaced by			
			Datum/Date	Name	Werkstoff/Material
Gewicht Weight		Gezeichnet/Drawn	09.12.15	Dvorak	
		Geprueft/Checked	10.02.16	Dvorak	
Massstab/Scale	1:2	Standardsgeprueft Standard checked			Standard-Bauteil standard part ---
CAD-System:	CATIA V5	Normgeprueft/Standards			Blatt-Nr./page no. 01 / Index 0
Format :	A2	Benennung/Name			Zeichnungs-Nr./Drawing no.

ThyssenKrupp
Bilstein of America
Aftermarket & Motorsport

Motorsport SNS2
46mm, Linear
Take Apart

F4-BOA-0001228